VERNON Towel Warmers

DALLAS

Towel Warmer

Chauffe-serviettes

Calentador de toallas

PRODUCT SPECIFICATION SHEET

DALLAS SERIES

DAL-0800600-PC

FEATURES

- ☐ WALL MOUNTED
- ☐ HARDWIRE INSTALLATION KIT
- ☐ MOUNTING INSTRUCTIONS
- ☐ ALL ELECTRIC AND OIL FILLED
- ☐ COVER PLATES

TIMERS AVAILABLE SEPARATELY (NOT INCLUDED)

SIZES

- ☐ 800 x 600 MM
- ☐ 1200 x 600 MM

STOCKED FINISHES

- POLISHED CHROME (PC)
- BRUSHED NICKEL (BN)
- MATTE BLACK (MB)

DAL-0800600-BN

DAL-0800600-MB

SEE OVER FOR SPECIFICATION DRAWINGS

Product Code	Finishes	Sizes (mm) Height	Sizes (mm) Width	Sizes (Inches) Height	Sizes (Inches) Width	Output (Watts/BTU)	Element Size	Number of Elements
DAL-0800600	PC, BN, MB	800	600	31.5	23.62	293 / 1000	150W	13
DAL-1200600	PC, BN, MB	1200	600	47.24	23.62	448 / 1528	300W	20

Intertek

Distributed by Kartners Bathroom Accessories
Address: North Vancouver, British Columbia, Canada
toll free number: 1-877-490-3537
website: www.vernontowelwarmers.com

Email: support@vernontowelwarmers.com

DALLAS

Towel Warmer

Chauffe-serviettes
Calentador de toallas

PRODUCT SPECIFICATION SHEET

DAL-0800600

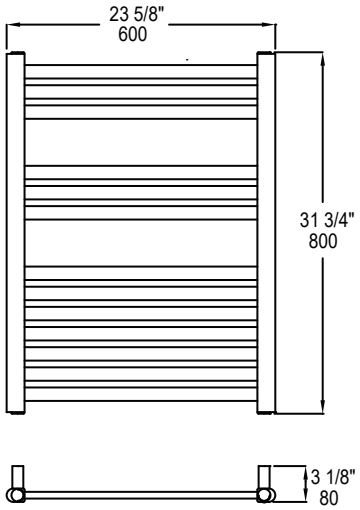

DAL-1200600

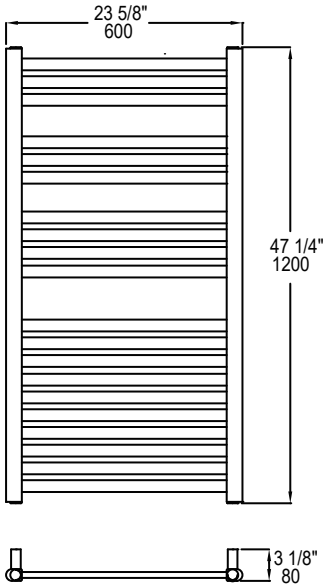

Vernon Towel Warmer Hardwire Kit Round -PC
Code: VTW-HWK-RD-PC

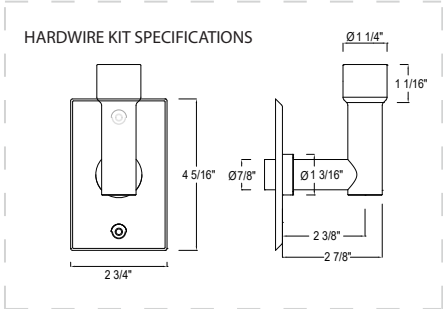

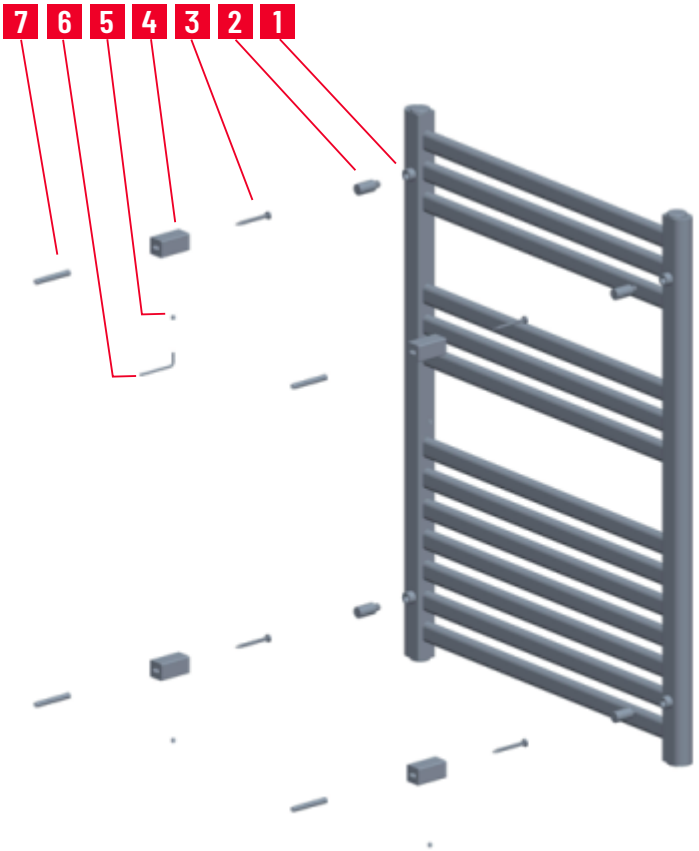

Installation Diagram 3

- Dallas

1. Solid fixing lug
2. Wall support core
3. Wall screw
4. Wall support
5. Grub screw
6. Allen Key
7. Wall plug

TIMERS AVAILABLE

VPT24-1PZ

DDS15-BDZ

Intertek

Distributed by Kartners Bathroom Accessories
Address: North Vancouver, British Columbia, Canada
toll free number: 1-877-490-3537
website: www.vernontowelwarmers.com

Email: support@vernontowelwarmers.com